AIR LEAK TESTING METHODS
AIR DECAY, DIFFERENTIAL, MASS FLOW

PURPOSE: To explore the differences between the testing processes of three of the main types of air leak tests: Air Decay, Differential Air Decay and Differential Mass Flow.

LEAK TESTING is an important quality control test in the manufacturing industry. Since there is no such thing as a completely leak-free component, the key is to determine what leak rate is acceptable in order to manufacture products that are safe and adequate for the customer's needs.

In the early days of leak testing, it was customary to submerge a manufactured part under water to look for bubbles which would signify a leak in the part. While this primitive method was simple and cost efficient, it was also time consuming and did not provide precise quantified leak rate data. Often there is no detrimental consequence if components have a small leak, but the question is how many bubbles would be acceptable over a given time.

Air leak testing technology quickly became a game-changer in the manufacturing industry. Air leak testing instruments could be programmed and automated into production lines to quickly and accurately detect miniscule leak rates greatly reducing test times, increasing production, and decreasing scrap.

This article will address three types of air leak testing: pressure decay, differential pressure decay and differential mass flow. Examples of testing specifications that would be best suited for each of the test methods will be provided along with a description of each how each method's testing process and instruments work.

ATEQ is the leading global manufacturer of fast and accurate leak testing equipment. Since 1975, ATEQ has been building a leak testing knowledge portfolio filled with hundreds of renowned manufacturing companies and how to leak test thousands of different manufactured components.

ATEQ provides leak testing instruments to all manufacturing industries including: automotive, medical, electronics, valves, packaging, appliances, aerospace, HVAC, agricultural and batteries.

ATEQ has experienced application engineers in more than 40 countries all around the world that can provide consulting and leak testing instruments to create efficient leak or flow testing solutions. ATEQ can assist with teaching the science of leak testing, application studies, developing testing specifications, selecting the right leak tester, integrating leak testers into automated production lines, training, instrument calibrations, technical support, repairs and preventative maintenance.

LEGAL DISCLAIMER: *This document is designed to help our prospects and customers to set their test specification. This document does not remove or lessen the prospect or customers responsibility for setting their test specification, and verify that the findings correspond to the purpose of their product. ATEQ, its employees, and its affiliates cannot be held responsible/liable for the consequences of an improperly set test specification.*

STANDARD VS. DIFFERENTIAL PRESSURE DECAY

Differential pressure decay leak testers, while more expensive since they contain two sensors, are often superior to standard air decay testers because they can test smaller leaks more quickly and accurately. Also, because it uses both a test and reference part, a change in temperature is no longer a factor in test results.

AIR DECAY

A single pressure sensor is used in an air decay test to measure the test pressure and pressure drop from a leak. The sensor must be sized for the test pressure; therefore, the sensor's range must be greater than or equal to the test pressure.

For example, a 100 kPa test pressure requires at least a 100 kPa full scale sensor (1000 mbar). The part is filled and stabilized to the pressure, then the test pressure is taken at the beginning of the test time. The leak is measured as the test pressure drops over time then is multiplied by the part's volume.

An air pressure decay test is best suited for testing leaks that have a pressure drop per second larger than the accuracy of the sensor.

For example, a 1000 mbar sensor with 0.05% accuracy, could be used to test a 30 sccm max. leak from a 1-liter part or 0.5 mbar/second (50 Pa/s). Measuring the leak or pressure drop for 10 seconds would cause a 5-mbar (500 Pa) pressure drop that is 10 times the sensor's accuracy. A 2000 mbar (200 kPa) test pressure would double the test time or the max. sccm leak rate or would require the test volume to be reduced by half.

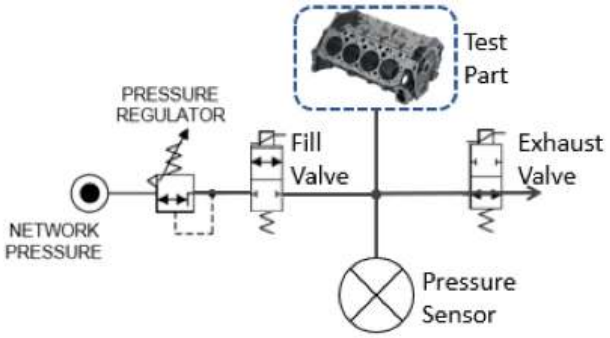

DIFFERENTIAL AIR DECAY

Two pressure sensors are used in a differential air decay test along with a test and reference part. One sensor measures the test pressure and a second sensor measures the differential pressure drop from a leak. The pressure is equalized on both sides of the differential pressure sensor during the fill and stabilize steps. The test step isolates the test part from the reference part to measure the leak as a differential pressure drop over time multiplied by the part's volume.

The range/accuracy of the differential pressure sensor is independent from the test pressure.
For example, a 100 kPa or 200 kPa test pressure could use the same 0.05 kPa (50 Pa) full scale differential pressure sensor.

A differential pressure decay test is best suited for testing leaks that have a pressure drop per second larger than the accuracy of the differential pressure sensor and greater than 0.03 mbar/second (3Pa/s).

For example, a 0.05 mbar (50 Pa) differential pressure sensor with accuracy of 2% of reading + 1% of full-scale, could be used to test a 2 sccm max. leak from a 1-liter part, 0.033 mbar/seconds (3.3 Pa/s). Measuring the leak as a pressure drop for 2 seconds would cause a 0.067 mbar (6.7 Pa) pressure drop that is >10 times the sensor's accuracy.

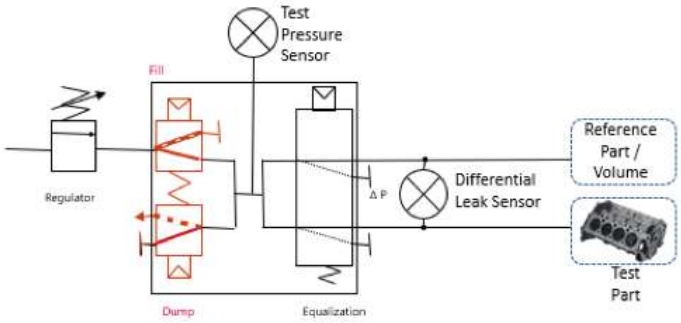

DIFFERENTIAL MASS FLOW

While most components have a designated leak rate, sometimes it makes more sense to measure a product's leak as a flow. A hole in food packaging, a bottle cap or tank is an unwanted 'leak' whereas a product like a muffler, valve, faucet or catheter tube is supposed to have designated rates of 'flow'.

Two pressure sensors are used in a differential mass flow test along with a test and reference part. One sensor measures the test pressure and a second sensor measures the air moving through the mass flow sensor or Laminar Flow Element (LFE).

The pressure is equalized on both sides of the mass flow (LFE) sensor during the fill and stabilize steps. The test step isolates the test from reference parts to measure the leak as the flow to maintain the pressure. The time for the flow to ascend to the test part leakage is dependant on the volume of the test part. After this delay, the sccm leak through the mass flow meter will equate to the test part's leakage.

For example, a 1 sccm leak may require 1 second to ascend to 1 sccm on a 1-liter part, however ascending to a 10 sccm leak on a on a 10-liter part may require 10 seconds.

A differential mass flow test is best suited for testing leaks that have a pressure drop per second greater than 0.005 mbar/second (>0.5Pa/s) and able to respond to 100% of the test leak less than 30 seconds. The accuracy of the mass flow sensor should also be 10 times better than the sccm part leak.

Note: Mass flow sensors may attain their accuracy at the expense of response, therefore both must be considered.

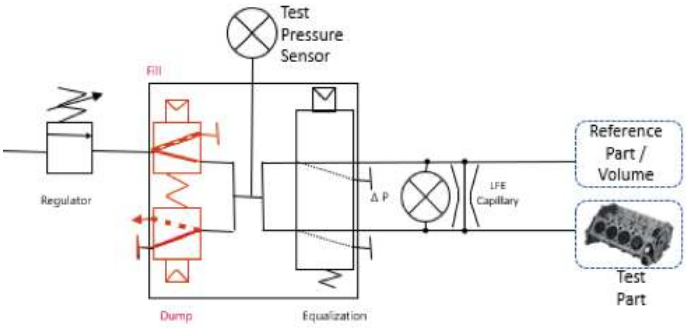

All leak/flow testing is governed by the formula below, derived from the Ideal Gas Law.

$$\frac{scc/min\ Leak\ rate}{volume\ in\ Liters} = \text{mbar/min} \div 60 = \textbf{mbar/second}$$

For guidance on how to leak test your company's manufactured components or more information on ATEQ's other testing technology product ranges like tracer gas testers, ionization electrical leak testers or battery testers, contact us.