INTERNAL COMBUSTION ENGINE

FINDING SMALLER LEAKS USING THERMODYNAMICS

Leak Testing Academy
Measurement Education and Studies

PURPOSE: Explain how to use knowledge of thermodynamics to help find smaller leaks in an internal combustion engine leak test.

LEAK TESTING is an important quality control test in the manufacturing industry. Air leak testing a fully assembled automotive internal combustion engine requires an accurate leak testing instrument and a knowledgable applications engineering in order to find leaks at the production rate. Proper understanding of engine technology, thermodynamics and pressure regulation can help manufacturers have optimal quality control on their fully assembled engines. The simple use of multiple fill points, compressed air tanks and heat exchangers is a key factor to improve the performance of a leak test station.

ATEQ is developing a technology, US patent pending, to automatically calculate and generate the ideal adiabatic pressure for these tanks, at the current altitude and weather conditions of the test stations. ATEQ also has a technology that helps to identify the area that leaks in the main engine cavity.

Leak Testing Academy

Measurement Education and Studies

ATEQ is the leading global manufacturer of fast and accurate leak testing equipment. Since 1975, ATEQ has been building a leak testing knowledge portfolio filled with hundreds of renowned manufacturing companies and how to leak test thousands of different manufactured components.

ATEQ provides leak testing instruments to all manufacturing industries including: automotive, medical, electronics, valves, packaging, appliances, aerospace, HVAC, agricultural and batteries.

ATEQ has experienced application engineers in more than 40 countries all around the world that can provide consulting and leak testing instruments to create efficient leak or flow testing solutions. ATEQ can assist with teaching the science of leak testing, application studies, developing testing specifications, selecting the right leak tester, integrating leak testers into automated production lines, training, instrument calibrations, technical support, repairs and preventative maintenance.

LEGAL DISCLAIMER: *This document is designed to help our prospects and customers to test their internal combustion engines. This document does not remove or lessen the prospect or customers responsibility for setting their test parameters, and verify practically that the findings correspond to the purpose of their product.*
Ateq, its employees, and its affiliates cannot be held responsible/liable for the consequences of an improperly set test system, or an improperly chosen test method.

ENGINE LEAK TESTING

"ATEQ instruments are invincible on tests of small components but can also be used to test larger applications, like engines"

TEST METHOD OVERVIEW

Each component in an automotive internal combustion engine is tested for leaks at multiple levels in the manufacturing process. Although an engine's primary function is to contain liquids like oil, engine coolant and exhaust gases, engines are typically leak tested with air during manufacturing.

Many individual engine components must pass a leak test before the assembly of an engine, but it is also important for manufacturers to do a final verification to see that the whole assembled engine also does not leak.

The assembled engine test is typically performed on a production line at a designated speed, like one engine every two minutes, with an air leak test before engine is mounted in the vehicle or to outside accessories (radiator) and before it is filled with fluids (oil, coolant).

Since an automotive engine is a large device with a lot of areas that tend to fill slowly, like the oil pump circuit, a classic leak test could only point out major assembly errors like if a operator forgot to install an oil cap or drain plug. But simply pointing out large leaks was not specific enough leak testing data.

ATEQ instruments are typically known for leak testing small components, like a tire valve, a watch, or an ink cartridge accurately and at a fast speed. The instruments are effective for these type of applications because of their small volume high precision sensors and pressurized spool valve. Even though engines are a larger leak testing application, ATEQ has the experience, global presence and wide range of testers to create a successful testing solution.

CLASSIC ENGINE LEAK TEST SYSTEMS

The "classic" engine leak test system used a flowmeter. This flowmeter could be either a heat exchange-based mass flowmeter or a laminar flowmeter with a very large flow rating pressure regulator, large bypass valves and large hose connections to the engine. Other times, a basic gauge or absolute pressure decay system was used.

Classic simplest setup for an engine main cavity test

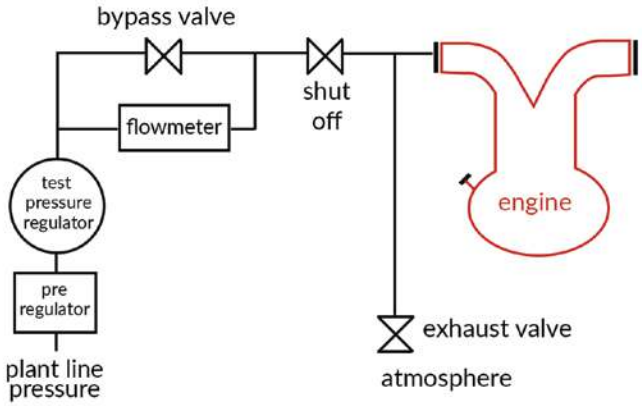

CLASSIC ENGINE LEAK TESTS

"For the classic leak test system, there are two cavities to test: the water jacket and the main engine cavity which includes the oil, intake and exhaust areas."

ENGINE TESTING CAVITIES

An engine has 4 cavities for testing, as seen in the 4 color engine diagram below.

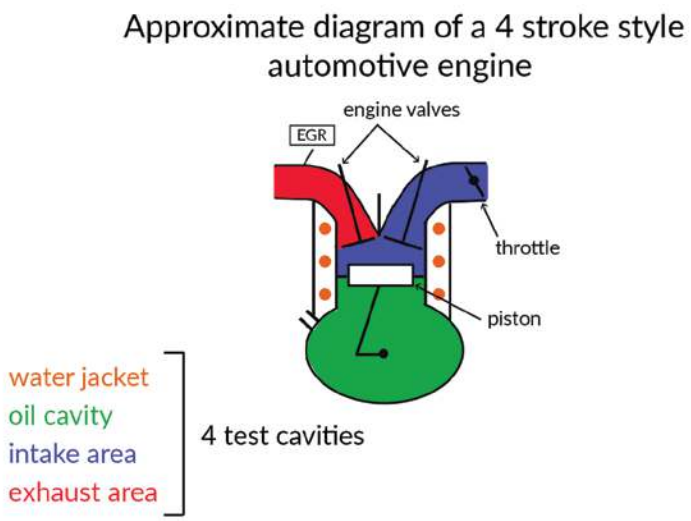

The classic engine air leak test cannot differentiate between a leak in the oil cavity, the intake or the exhaust since the parts are linked through the pistons rings. The rings are not completely leak tight because there is only a metal to metal contact between the piston rings and the cylinder.

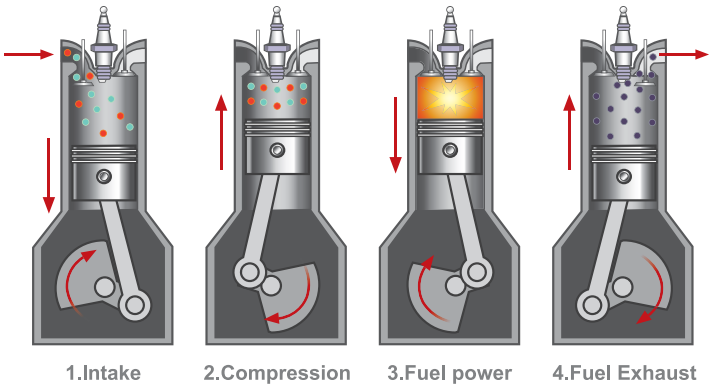

CLASSIC ENGINE LEAK TESTS

For the classic leak test system, there are two cavities to test: the water jacket and the main engine cavity (oil/intake/exhaust). The engines are tested concurrently with two flowmeters, at two different pressures to be able to detect a leak between the two cavities. A leak between the two cavities would translate to a pressure increase detected in the lower pressure cavity. Typically, the water jacket test is the higher pressure cavity.

At the speed of a typical engine line, approximately 2 minutes per engine, the leak test of the water jacket is typically not an issue. The leak test issues are generally in the testing of the main engine cavity because of its large fill volume. This is due to all of the little spaces that need to be filled throughout the engine like the oil pump and oil filter.

A typical cycle time is at least 1 minute per engine. In this configuration, the allowable leak test time is not sufficient to stabilize the air inside the engine which causes the flowmeters to indicate a high leak reading, like 630 sccm, even on a supposedly good engine.

So there is a learning cycle to teach the flowmeter that 630 sccm is the curve's response to a good non-leaking engine in order for the flowmeter to declare the difference between a good and bad engine.

The 630 sccm leak reading is not constant and varies with the temperature and atmospheric pressure in the plant. For example, the flowmeter could read 590 sccm in the morning and 670 sccm in the afternoon. So it is necessary to have frequent learning cycles on an assumed non-leaking engine.

ENGINE TESTING SOLUTIONS

"Filling multiple ports simultaneously or filling at a higher pressure with bypass valves can speed up fill time."

FIRST SOLUTION

Filling from multiple ports in the engine can help fill the engine more quickly. There are at least 3 ports that can be filled on the exhaust intake and oil dipstick. Also, simply opening the throttle in the cavities during the test allows for quicker filling of the intake cavity.

SECOND SOLUTION

Another solution to speed up fill time is to fast-fill at a higher pressure using bypass valves. The problem with this solution, however, is that the faster the engine is filled, the more stabilization time is needed. In addition, the higher pressure from the fast-fill gets stored in some parts of the engine and can create a negative leak (pressure increase in the engine main cavity during the test). So when using this method, the fast-fill has to be controlled independently with valves and timed properly to fill the volume of each cavity.

Getting the engine in a repeatable crankshaft position to the leak test station ensures that the volume of the cavities remains the same during every test, which produces more repeatable test results. This allows for faster filling without over pressurizing, however, there is now a long stabilization time so not much time is saved overall.

Troubleshooting also becomes a little bit trickier because an already-filled engine cannot be retested using the same instrument settings because it would over pressurize the engine. The tester would require a troubleshooting mode where the instrument pressurizes the engine at the test pressure repeatedly without exhausting the air. This would provide the readings on a fully stabilized engine at the test pressure, or allow for a soapy water leak location test to be performed.

Setup to differentiate the leak by cavity, 3 flowmeters

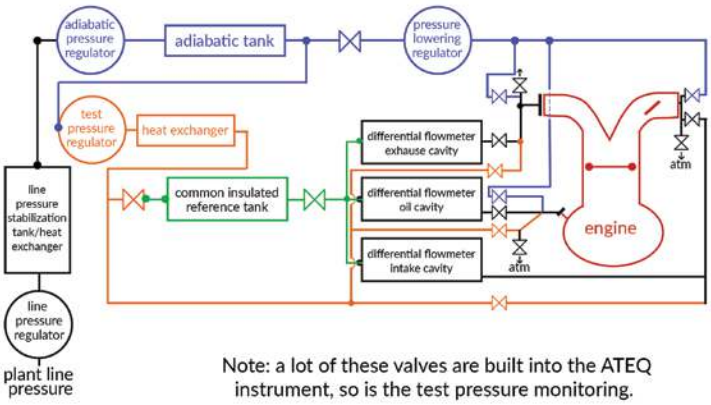

Note: a lot of these valves are built into the ATEQ instrument, so is the test pressure monitoring.

Basic setup with fill through multiple entry points for an engine main cavity test with multiple fill locations and fast fill at a higher pressure

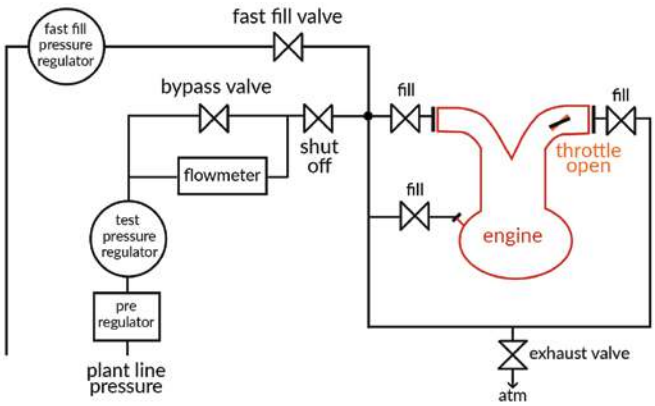

AIR STABILIZATION & THERMODYNAMICS

"Sometimes slower fill and stabilization times can be avoided with good fixture design and heat exchange compensation"

THIRD SOLUTION

The air stabilization time inside a massive rigid component like an engine depends on several factors. Good test fixture design avoids unsecured parts like moving valves or expanding test hoses.

Some slower fill times are unavoidable like filling air to the paper material of the oil filter or casting porosities that do not leak to the outside.

Another component of fixture design is flexibility. Most of the engine is generally rigid cast aluminum, but some hoses or valve covers are a bit flexible. Stabilization time needs to remain long enough to let the flexible parts finish stretching before taking a leak measurement. There is not much the test station design can do to curve fill time on flexible parts without an intricate and expensive test fixture.

The last component of fixture design is heat exchange. Thermodynamics explains that air cools when it is decompressed, and warms up when it is compressed. Filling an engine with air that was just decompressed from plant line pressure, (going from around 90 PSI to 2 PSI, for example) causes significant heat exchange.

Even though test fixtures can not do much to speed up stabilization times for porous or flexible parts, there is something that can be done to counter heat exchange.

During a fill or fast-fill cycle, the cold air freshly decompressed from around 90 PSI meets the atmospheric air inside the engine, that is being compressed at 2PSI, and warms up. The mixing between these two airs and the contact with the engine at room temperature creates the air flow levels seen as stabilization. When the temperature changes, pressure changes (PV=nRT).

REDUCING HEAT EXCHANGE

Heat exchange can be reduced by feeding air from a lower controlled pressure that is already at room temperature rather than air that is decompressed from 90 PSI so the air going into the engine will be cooler. In fact, by knowing the quantities of molecules that are heated up inside the engine and the quantities of molecules that are added, a tank pressure can be selected to match the exact pressure that will create the same air cooling and air heating in the engine during the fast-fill cycle.

In order to do this, use a tank with the right regulated pressure. The fast-fill is simply done with valves that make the cavities communicate with the fast-fill pressure.

If air is not added from the pressure regulator during the fast-fill and only the tank pressure is used:

$$P_{atm} * V_{engine} + P_{tank1} * V_{tank1} = (P_{atm} + 2psi) * (V_{tank} + V_{engine})$$

These valves are to be non-heating non-leaking valves with o-ring pressurization, like the ATEQ Y valves, in order to minimize the effects of heat.

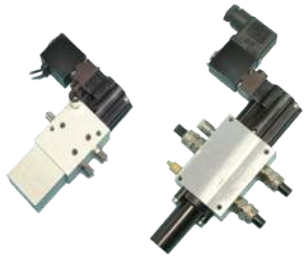

The tank that stores the pre-fill pressure has to be metal because it is also a heat exchanger that brings the decompressed air to ambient temperature. The fill speed can also be reduced by using flow restrictors or another pressure regulator to make sure that the pressure does not go above a given pressure specified by the engine manufacturer.

DETERMINING THE IDEAL TANK PRESSURE

"When the air goes quickly from the tank to the engine there is no time for heat exchange of the gas with its environment since it is decompressed so quickly"

MATH & PHYSICS

The last step of the fill time is done through a regular pressure regulator with test pressure air at ambient temperature by using another metal tank heat exchanger with non-heating, non-leaking valves with o-ring pressurization.

When the air goes quickly from the tank to the engine, it goes through "adiabatic" decompression. This means that there is no time for heat exchange between the gas and its environment since it is decompressed so quickly.

The general formula for an air temperature change during an adiabatic pressure change is:

$$T_2 - T_1 = T_1 \left(\left(\frac{P_2}{P_1} \right)^{\frac{\gamma-1}{\gamma}} - 1 \right)$$

With T1 the initial temperature, T2 the resulting temperature, P1 the initial absolute pressure and P2 the final absolute pressure. For air $\gamma = \frac{7}{5}$.

Air is made primarily of diatomic molecules, O2 and N2.

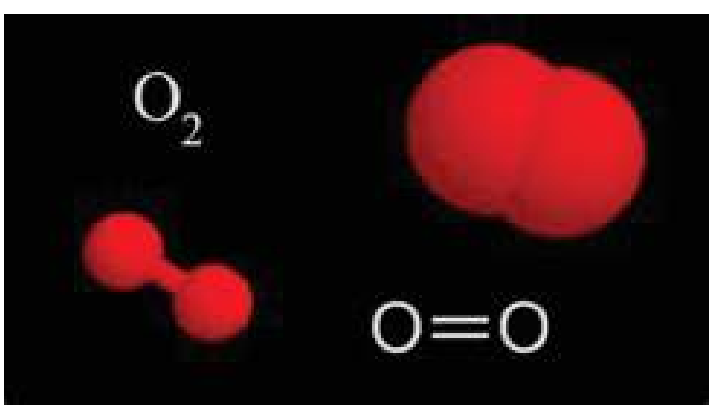

EXAMPLES

For example, if we test at 2 PSIG (16.5 PSIA) and we decompress from a line pressure of 90 PSIG (104.5 PSIA) at a plant temperature of 20 Celsius (around 70 Fahrenheit or 293 Kelvin) the temperature of the air we inject in the engine is:

If ambient temperature in the plant is 20°C or 70°F, T1= 293.15 Kelvins

P2= 16.5 PSIA P1= 104.5 PSIA

$$\frac{\gamma - 1}{\gamma} = \frac{\frac{7}{5} - \frac{5}{5}}{\frac{7}{5}} = \frac{\frac{2}{5}}{\frac{7}{5}} = \frac{2}{7} = 0.28$$

T2-293.15= 293.15 x ((16.5/104.5) 〖^(2/7)〗 -1)

T2-T1= 293.15 x ((0.157) 〖^0.28〗 -1)

T2-T1=293.15 x (0.596-1)

293.15 x -.41= -118°C of difference from ambient: Therefore T2= -98°C (~ -144 °F)

This helps to explain why the stabilization time is long, and why very dry air is needed in order to avoid condensation.

Inside the engine:

P1 = 14.5 PSI atmospheric pressure in plant

T2-T1= 293.15 x((16.5/14.5)^0.28-1) =
293.15 x ((1.138)^0.28-1)=293.15 x 0.037=10.84

TEMPERATURE CALCULATIONS

"It is important to understand why stabilization time is long, and that very dry air is needed in order to avoid condensation."

AIR TEMPERATURE

The temperature of the atmospheric air inside the engine only increases by 11°C, but there are more air molecules. The goal is to get the number of molecules n1 added with their temperature decrease from ambient to equal the number of molecules n2 in the engine and their temperature increase to T3 to even out the heat inside the engine.

(T2-T1) n1= (T3 -T1) n2

The number of molecules added to the engine to reach test pressure (Ptest) can be calculated using Boyles Law: PV= nRT since we consider T to be constant.

Vengine = volume of the engine main cavity (oil + intake + exhaust)
Patm = atmospheric pressure in the plant
Ptank = pressure in the "adiabatic" tank

Before the fill :
Patm x Vengine= n1 RT

After the fill:
(Patm+ Ptest) x Vengine= (n1+n2) RT

(Patm+Ptest)Vengine=(Patm*Vengine)+n2RT

n2= Ptest x Vengine/RT

The goal is:
(T2-T1)Ptest Vengine/RT=(T3-T1)Patm Vengine/RT

(T2- T1) Ptest=(T3-T1) Patm

NUMBER CRUNCHING

$$Ptest * \left(\left(\frac{Patm + Ptest}{Ptank + Patm}\right)^{\frac{2}{7}} - 1\right) = Patm * \left(\left(\frac{Ptest + Patm}{Patm}\right)^{\frac{2}{7}} - 1\right)$$

Then $$\left(\frac{Patm+Ptest}{Ptank+Patm}\right)^{0.28} = \left[\left[\frac{Patm}{Ptest} * \left(\left(\frac{Patm+Ptest}{Patm}\right)^{0.28} - 1\right)\right] + 1\right.$$

Then $$\left(\frac{Patm+Ptest}{Ptank+Patm}\right) = \left(\left[\left[\frac{Patm}{Ptest} * \left(\left(\frac{Patm+Ptest}{Patm}\right)^{0.28} - 1\right)\right] + 1\right.\right)^{\frac{1}{0.28}}$$

Then $$\frac{Patm+Ptest}{\left(\left[\left[\frac{Patm}{Ptest} * \left(\left(\frac{Patm+Ptest}{Patm}\right)^{0.28} - 1\right)\right] + 1\right.\right)^{\frac{1}{0.28}}} = Ptank + Patm$$

Then solution: $$Ptank = \frac{Patm+Ptest}{\left(\left[\left[\frac{Patm}{Ptest} * \left(\left(\frac{Patm+Ptest}{Patm}\right)^{0.28} - 1\right)\right] + 1\right.\right)^{\frac{1}{0.28}}} - Patm$$

So with Patm=14.5 PSI Ptest= 2 PSI

$$Ptank = \frac{14.5+2}{\left(\left[\left[\frac{14.5}{2} * \left(\left(\frac{14.5+2}{14.5}\right)^{0.28} - 1\right)\right] + 1\right.\right)^{3.5}} = \frac{16.5}{\left(\left[\left[7.25 * \left(\left(\frac{16.5}{14.5}\right)^{0.28} - 1\right)\right] + 1\right.\right)^{3.5}}$$

Ptank = 7.2 PSIG

So the adiabatic optimum tank pressure is not necessarily what would have been guessed.

ATMOSPHERIC PRESSURE

"Atmospheric pressure varies on a daily basis and depends on altitude and time of day"

ATMOSPHERE VARIATIONS

Atmospheric pressure varies from day to day, depending on altitude and time of day. So the assumption of Patm=14.5 PSI is not always correct.

That's why ATEQ has developed a software (patent-pending) that automatically calculates the right level of tank pressure by using an electronic pressure regulator.

This is especially helpful for the engine plants that are at a high altitude.

For example, to calculate the difference in Ptank in Toluca, Mexico:
Elevation = 2,660 m (8,730 ft)

Therefore, the average atmospheric is approximately:
1013-(2660 x 0.1)=747 millibar (10.84 PSI)

So for a test pressure of 2 PSI:

$$\text{Ptank}=\frac{10.84+2}{\left(\left[\frac{10.84}{2}*\left(\left(\frac{10.84+2}{10.84}\right)^{0.28}-1\right)\right]+1\right)^{3.5}}=\frac{12.84}{\left(\left[5.42*\left(\left(\frac{12.84}{10.84}\right)^{0.28}-1\right)\right]+1\right)^{3.5}}$$

RESULTS

After number crunching:
Ptank= 5.67 PSIG for optimum balanced adiabatic effect.

Tank pressure can be fine tuned to pass a repeatability study at sea level with Ptank= 7.2PSIG. But a different Ptank adjustment is needed when the machine is installed in the plant, unless the leak testers have automatic adiabatic pressure generation (like the latest ATEQ leak testers).

FLOW METERS VS PRESSURE DECAY

While flowmeters were previously mentioned and ATEQ also sells pressure decay instruments, it is important to note that the same laws of physics apply to every air leak test, regardless the technology used to sense the leak: heat exchange mass flow, gauge or absolute pressure decay, differential pressure decay, laminar flow, differential mass flow, differential laminar flow.

Make sure to select the leak detector with the right sensor accuracy and sensitivity for the application. For example, If the aim is to detect a 1 Pa/s leak within 15 seconds, it would be best to use a sensor with a full scale of 500 Pa maximum.

Obtaining a detailed calibration certificate of the leak detector can help assess if the instrument's accuracy matches the leak being detected.

COUNTERING MEASUREMENT DRIFTS

"What is needed is a tank large enough so the tank pressure regulator does not need to add pressure during the fast-fill time."

TANK SIZE

Generally what is needed is a tank large that is enough so the tank pressure regulator does not need to add pressure during the fast-fill time.

Boyle's law can be used again to determine the size the tank needed.

Vtank = volume of the "adiabatic" tank

(Ptank+Patm)Vtank+Patm Vengine =
(Ptest + Patm) Vtank+(Ptest+Patm) Vengine

(Ptank+Patm-Ptest-Patm)Vtank =
(ptest+patm-patm) Vengine

Vtank=Ptest*Vengine/(Ptank- Ptest)

So in the example,
Vtank=(2/(7.2-2)) Vengine

So Vtank= 0.384 * Vengine

This means there is a minimum tank volume, but it is ok if the tank is larger.

MEASUREMENT DRIFT

If the air getting in the machine is not at a repeatable pressure or temperature, measurement drifts can occur despite the adiabatic tank.

To compensate for this drift, add a metal tank/heat exchanger that stores the dry filtered air at 60 PSI in order to feed the Ptank pressure regulator with air at a constant pressure at ambient temperature.

Vlinep=the volume of the stabilized ambient temperature line pressure tank

PV= constant, Boyle's law

Vlinep = Vtank * Ptank/ 60 PSI

In the example
Vlinep=Vtank*7.2PSI/60PSI=0.12* Vengine

Once again, this is a minimum volume, but a larger volume will work as well.

EXTERNAL FIXTURE DESIGN

"Four tanks are typically recommended and tank size depends on how many flowmeters are used."

AVOIDING FLUCTUATIONS

The flowmeter sees the fluctuations of the pressure regulator oscillating with the engine volume. In order to avoid seeing the fluctuations, an instrument (like a copper tube coil wrapped in insulation and put in a cabinet) that uses a pressurized volume to feed the flowmeter during the test time can be added.

The volume is designed to not exchange heat with the environment so it doesn't affect the measurement during the test and it can quickly exchange heat internally when re-pressurized after a test.

When using a tank to feed the flowmeter, the readings of the flowmeter are affected by the ratios of tank volume and engine volume, as shown by the formula below.

Flow displayed=
Flow read x (volume engine+ Volume tank)/Volume tank

The instrument has to compensate for the ratios by having that formula built-in to the tester, like ATEQ's differential mass flow leak testers do.

TANK TOTAL

It is recommended to have at least 4 tanks:

1. Incoming air heat exchanger/tank
2. Adiabatic optimum tank
3. Reference tank for test pressure storage
4. Test Pressure regulator heat exchanger

CLAMP

It is important for the engine manufacturer to remember to put on the Exhaust Gas Recirculation (EGR) valve clamp. If this anti-pollution clamp is not put on before the leak test, the flowmeter will not be able to read zero leak on the master engine, no matter the time adjustment.

INTERNAL INSTRUMENT DESIGN

"It is important to detect leaks in engine components before testing the assembly in the engine because it is costly and time consuming to remove or exchange a cylinder head."

INSTRUMENT DESIGN

The ATEQ MF instrument range used on engines and transmissions is designed to measure air flow with very low differential pressure (7 Pascals). This low pressure gives a faster response time to the flowmeter. It takes less time to establish 7 Pascals of pressure drop in an engine through a leak than it takes to establish 7000 Pascals through the same leak, which means a 1000 times less response time.

WHAT IS A PASCAL?

A Pascal (Pa) is a pressure unit named after Blaise Pascal, a French mathematician, physicist and inventor who worked on theories in pressure and vacuum and invented Pascal's mathmatical triangle, the syringe and the hydraulic press.

1 Pound per square inch equals 6890 Pascals
1 PSI = 6890 Pa

RESULTS

Instead of the variable 630 sccm, (590 to 670) the readings of the flow meter went down to 90 sccm, not to a perfect zero leak on the master engine. The overall cycle time given was still too short for a perfect zero reading for a zero-leak engine.

By lowering the offset, the offset also became very repeatable and reproducible from morning to evening and from one day to the next. So a dependable reading reproducible at 90 sccm, +/- 5 sccm when an engine gives a reading of 100sccm, means there is definitely a leak somewhere.

There is no longer a learning cycle to tell the instrument that 90 or 95 is to be considered zero. The instrument displays the true measurement. This way, the EGR leak isn't zeroed. So if the EGR clamp is forgotten, the instrument will show a 150 sccm reading.

LEAK TESTING COMPONENTS

With a properly set up leak test on the whole engine, leaks are often detected either due to assembly mishaps or faulty components that were not previously leak tested. Seeing a leak tester read that an engine has leaks can be a big frustration to manufacturers and their suppliers.

It is vital to test for leaks in components before the assembly of the engine. It is costly to remove a cylinder head and exchange it for a non-leaking one if a leak is detected.

The main goal of engine leak tests are to ensure no oil or coolant will leak in the fully assembled engine. Sometimes the leaks detected in the final engine test are smaller than what was specified to the supplier in the prints of some parts, like the exhaust and intake. In part prints, it is important to designate all of the areas of the engine that should be leak tested before the assembly of the engine. It is also important to specify realistic final engine testing specifications that are not overly stringent.

FINDING LEAK LOCATIONS

"The recommended solution for finding small leak locations on an engine with 3 cavities is to use 3 flowmeters with very low pressure drop."

FINDING LEAKS

Finding small leak locations on a big engine with soapy water or tracer gas sniffing to see if the leak was in a critical area is a time consuming task.

Getting an idea of where the leak is requires a bit more cycle time for air stabilization in the engine, but it can be achieved with a special ATEQ model MF differential flow tester.

This engine main cavity is divided into three parts by the pistons and engine valves. Since the piston ring leaks and the valve leaks are much larger than the leak that is trying to be detected, the recommended solution is to use 3 flowmeters with very low pressure drop.

Approximate diagram of a 4 stroke style automotive engine

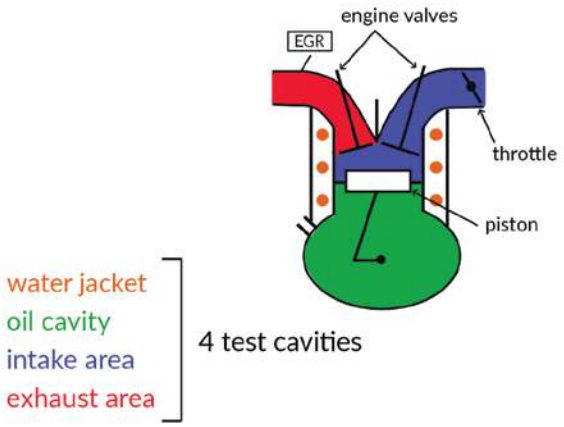

For example, if the engine valves were tested for leaks of maximum 100 sccm at 14.5 PSI, and the piston rings for 10,000 sccm at the same pressure, the maximum leak between two cavities would be the piston leak.

But even with the maximum piston ring leak 10,000 sccm at 14.5 PSI and the same leak at 7 Pa, the maximum difference of pressure between two chambers fed by the same tank during test would be, by linear approximation:
14.5 PSI= 10,000 Pa
10,000 x 7/100,000=0.7 sccm

So compared to the leaks that are trying to be measured, this worst case cross chamber leak would be negligible.

Setup to differentiate the leak by cavity, 3 flowmeters

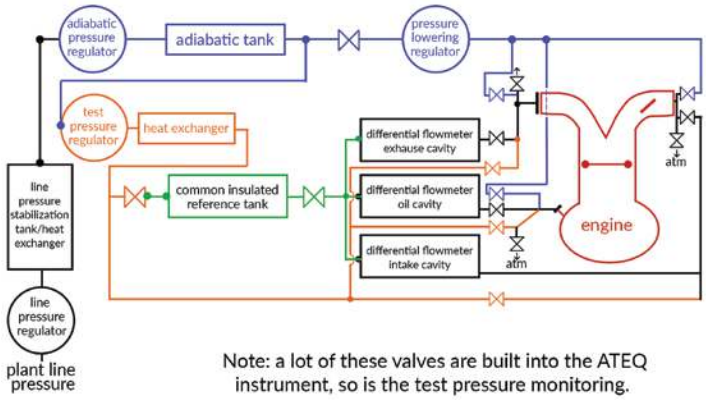

EASIER LEAK LOCATION

The 3 tests allow for an easier location of the leaks. As an added bonus, they allow for different reject levels depending on the cavity. For example, a porosity on the intake of 20 sccm at 2PSIG might not be a problem on the intake or exhaust circuit, but it would be a problem on the oil cavity where it could translate into an oil leak.

CONCLUSION

"ATEQ leak testers have tested thousands of engine components for automotive manufacturers around the world"

ENGINE TYPE CONSIDERATIONS

Engines equipped with a turbo compressor, contain a metal to metal bearing that leaks a lot of air to the outside. To leak test this type of engine, the engine needs to be sealed from the outside and the exact same engine test pressure needs to be applied on the other side of the bearing to mask that leak.

It is not easy to seal around a turbocompressor leak so the area should be subjected to the test pressure but not be part of the test circuit since the pressurizing chamber is likely to leak.

It is important to note that the application and situations mentioned in this article are not a single client application. The leak levels described are a mix of various applications and clients, not a single specific engine test.

CONCLUSION

If a manufacturer is producing an engine or engine components, it is essential to take leak testing processes into careful consideration.

Understanding thermodynamics can be a valuable tool in finding smaller leaks in an internal combustion engine leak test. In addition, proper understanding of engine technology and pressure regulation can help manufacturers to have a better quality control on their fully assembled engines.

Using multiple fill points, compressed air tanks, heat exchangers and flowmeters is a key factor to improving the performance of engine leak testing stations.

Waiting to leak test until the engine is fully assembled is to be avoided because there are too many opportunities for error. It is important to leak test individual components before the engine is assembled and to keep leak testing specifications realistic and not overly stringent.

Since engine leak testing is a very complex process, it is best to work with experts in the field. ATEQ Applications Engineers can work with manufacturers and machine builders to develop the ideal testing specifications, procedures, instruments and automated fixture solutions.

Since 1975, ATEQ has been establishing locations around the world along with an extensive applications portfolio comprised of thousands of components manufactured by world-renowned companies.

After a project is complete, ATEQ's global support network will continue to remain readily available to customers for repairs, troubleshooting, standard or ISO 17025 calibrations, preventative maintenance and training with on-site options available.

Contact ATEQ if you would like to learn more about engine leak testing or n eed guidance towards an application testing solution.

More articles and white papers can be found at **www.ateq-leaktesting.com**